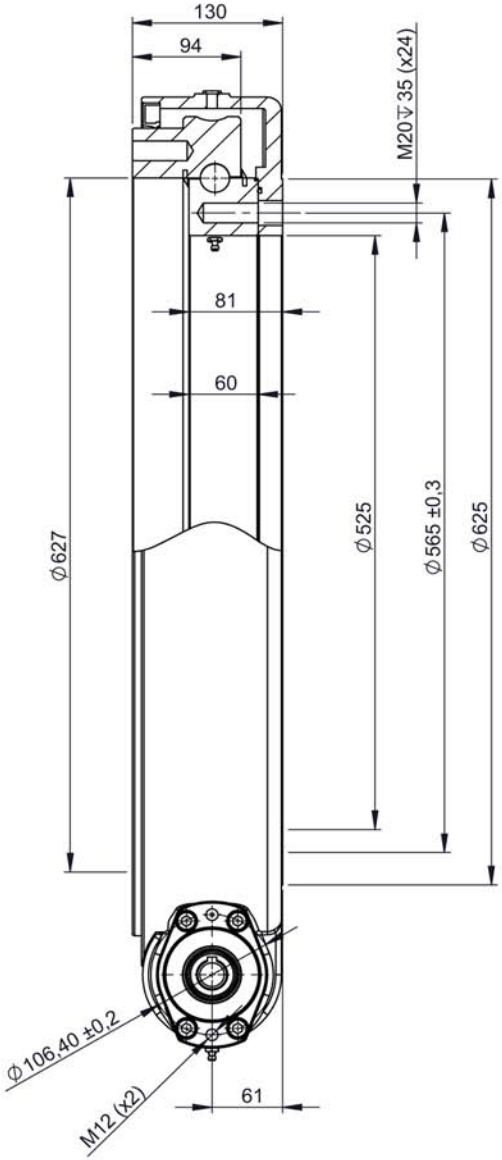

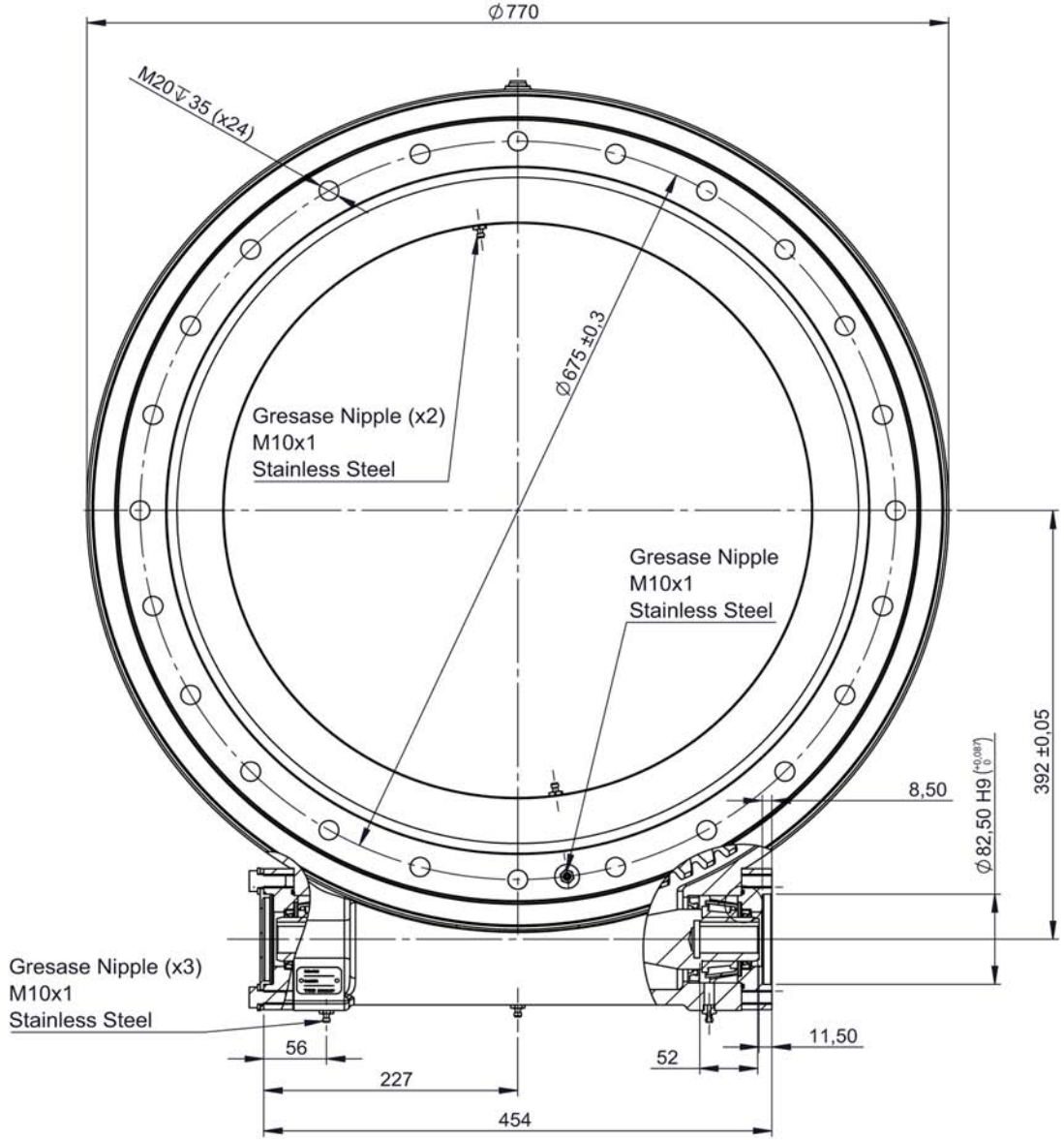

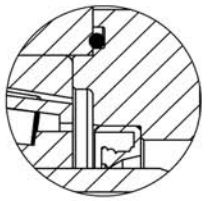

O-ring and Lip seal detail
Scale 1:1

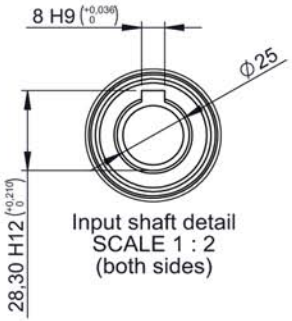

Input shaft detail
SCALE 1 : 2
(both sides)

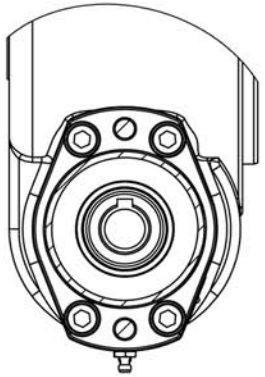

Output shaft detail
Scale 1:3
(Same configuration as Input shaft)

Main performance parameters

Gear Ratio	102:1	Holding torque	42.8kNm
Efficiency	40%	Tilting moment	325kNm
Self-locking gear	Yes	Radial static load	883kN
Backlash clearance	<0,17°	Axial static load	2364kN
Maximum torque	42.824Nm	Radial dynamic load	280kN
Nominal torque	42.824Nm	Axial dynamic load	327kN

Notes: All slew drive are pre-lubricated. Maximum output speed 1rpm.
Standard paint: For corrosion category C3-M - Color RAL 9005

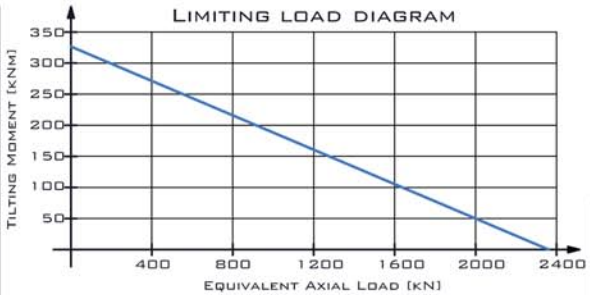

Shaft: Ø25mm Keyed Shaft
Flange: SAE - 2Bolt Flange

>1200	±1.2
>400.0 ~ 1200	±0.8
>120.0 ~ 400.0	±0.5
>30.0 ~ 120.0	±0.3
>6.0 ~ 30.0	±0.2
>3.0 ~ 6.0	±0.1
>0.3 ~ 3.0	±0.1
Range of sizes	Unstated tolerance

unicum
COMPOSANTS INDUSTRIELS

Reference	U-PRV5		Rev A
Units: mm	Denomination	Sales Drawing	
	MATERIAL: -	WEIGHT [kg]: 170.62	NUM. PIECES: 1
	SCALE: 1:5	SIZE: A3	SHEET: 1 of 1